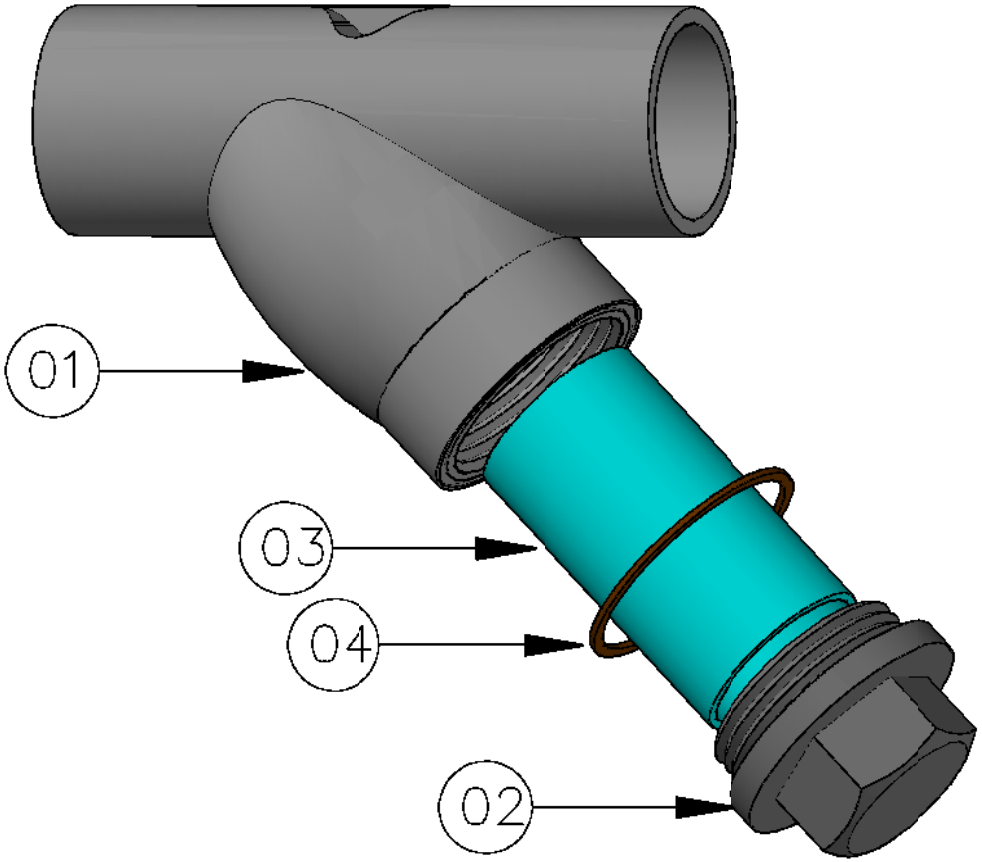

"Y" STRAINERS MATERIAL

No.	DESCRIPTION	CARBON STEEL	STAINLESS STEEL	STAINLESS STEEL	STAINLESS STEEL	STAINLESS STEEL
01	BODY	ASTM A 216 WCB	ASTM A 351 CF8	ASTM A 351 CF3	ASTM A 351 CF8M	ASTM A 351 CF3M
02	COVER	ASTM A 216 WCB	ASTM A 351 CF8	ASTM A 351 CF3	ASTM A 351 CF8M	ASTM A 351 CF3M
03	ELEMENT	SS 304	SS 304	SS 304L	SS 316	SS 316L
04	GASKET	PTFE	PTFE	PTFE	PTFE	PTFE